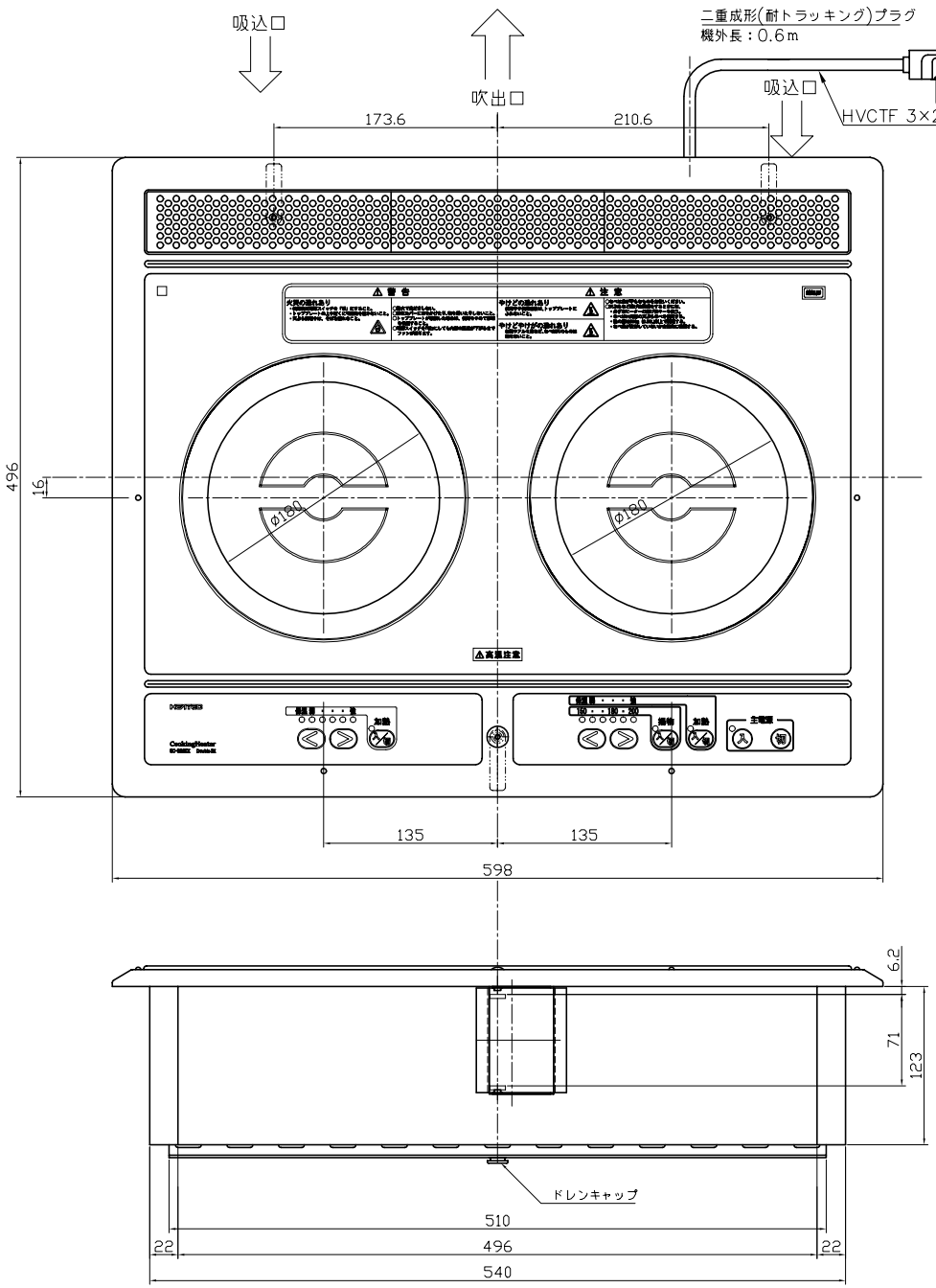

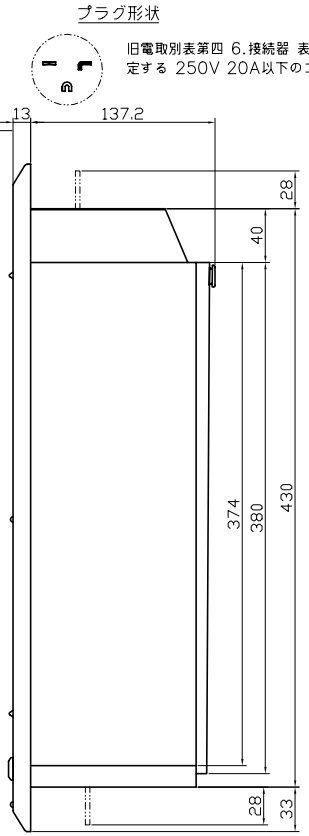

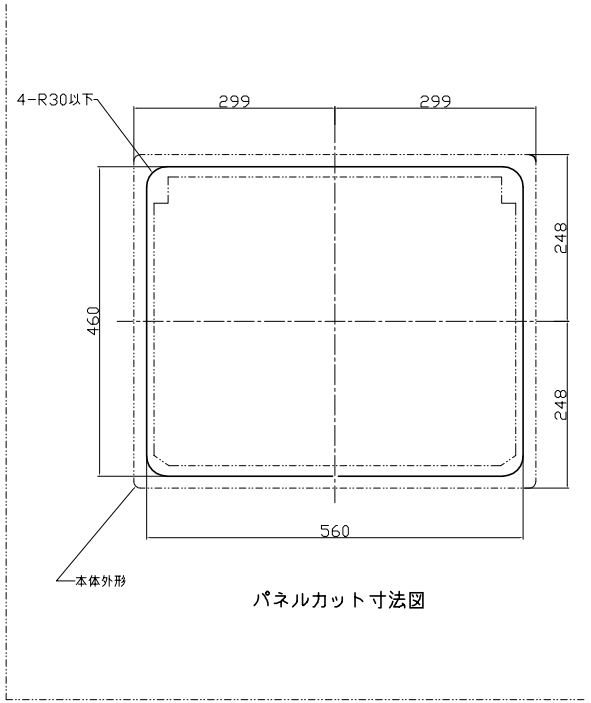

パネルカット寸法図

RevNo	Revision note	Date	Signature	Checked

Owner	Quantity	Title/Name, designation, material, dimension etc			Article No./Reference
Designed by: T.SATO	Checked by:	Approved by – date	Filename	Date: 03/06/04	Scale
HEATEC	Title/Name: EC-522IX外形図				
	Drawing number			Edition	Sheet